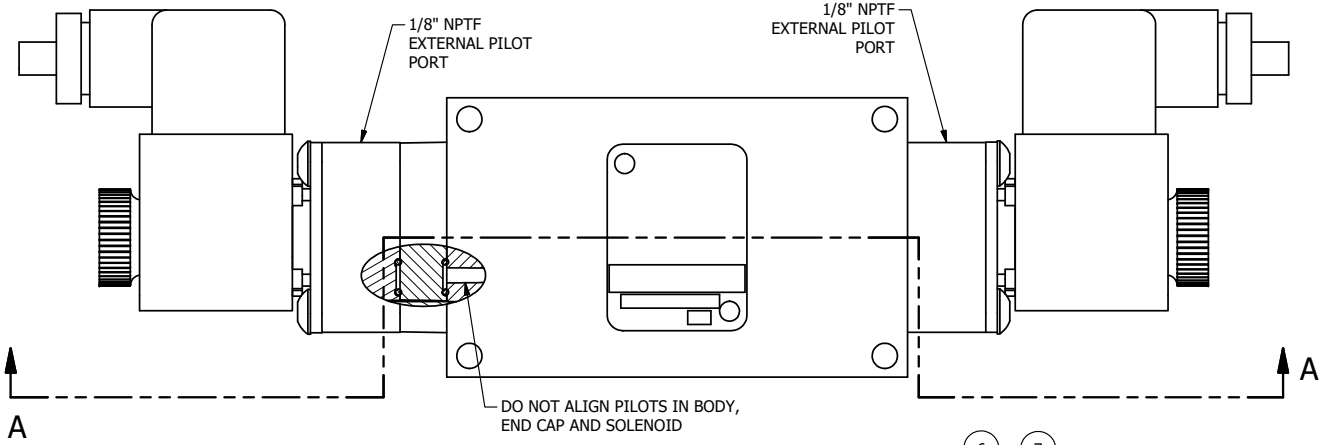


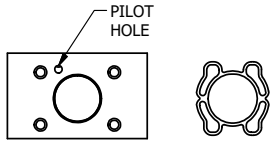


ALIGN PILOT AND SLOT IN ADAPTOR
WITH GASKET IN BETWEEN, BOTH SIDES
(ADAPTOR SHOULD BE INSTALLED AS SHOWN)
SUPPLY 50-150 PSI TO 1/8" NPTF PILOT PORT IN ADAPTOR.

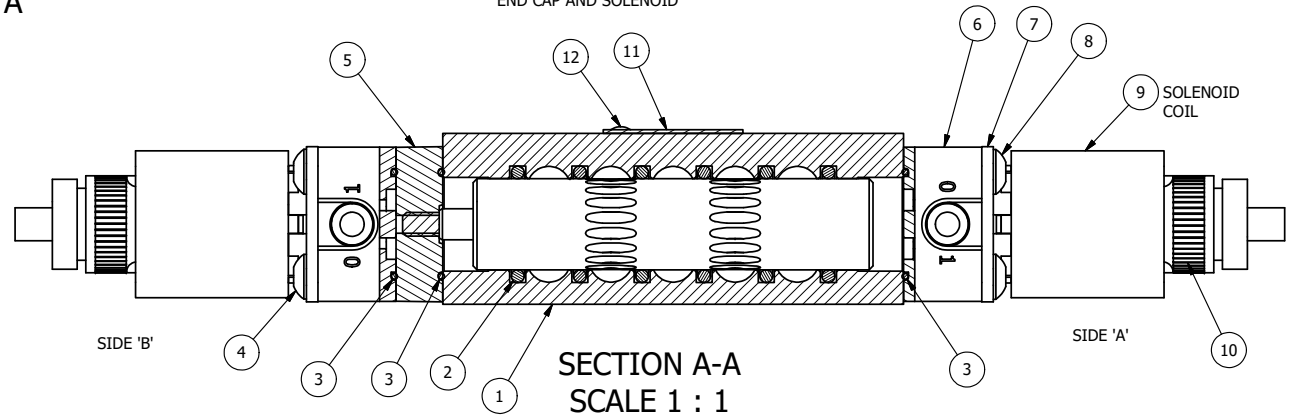


SECTION A-A
SCALE 1 : 1
VIEW FROM 3 PORT SIDE

| FLG | QTY | PART NO | DESCRIPTION |
|---|---|---|---|
| 12 | 2 | V-212 | SCREW, #2 X 3/16 DRIVE, TYPE U, OVAL HEAD, STAINLESS STEEL |
| 11 | 1 | AN-114 | NAMEPLATE, BLANK, FOR VALVES WITH SPRINGS OR DETENTS |
| 10 | 2 | V-567W | E SERIES SINTERED BRONZE MUFFLER, DUST EXCLUDER, V-613 LOCK WASHER |
| 9 | 2 | V-612-3 | ATEX COIL 24 VDC WITH 3 METER CORD. NASS # 1215 30.1-001/6896. |
| 8 | 4 | V-584 | SCREW, 10-24 X 1, BUTTON HEAD SOCKET CAP WITH MICROSPHERE APPLIED TO THREADS. |
| 7 | 2 | SEC3-7 | PLATE, RE-INFORCEMENT, SOLENOID, STAMPED, 304 STAINLESS |
| 6 | 2 | V-550-1 | SOL OPER, END MOUNT, NON-LOCKING O'RIDE |
| 5 | 1 | AY-EMY3 | ASSY - SPR CTR, CLSD CTR SPL, END MOUNT SOLENOID, 1/4" & 3/8" VALVES |
| 4 | 4 | V-601 | SCREW, 10-24 X 1-1/2, BUTTON HEAD SOCKET CAP WITH MICROSPHERE ADHESIVE |
| 3 | 3 | EMG3 | GASKET - END MOUNT SOLENOID, BUNA-N, 1/4" & 3/8" VALVES |
| 2 | 6 | V-39 | O-RING, VITON, STD BODY, 1/4" & 3/8" VALVES |
| 1 | 1 | B2-1E | BODY - SOLID, BUTTON BLEEDER, ANODIZED, 1/4" SIDE PORT VALVE |

NOTES:
1) ALWAYS GIVE VALVE MODEL AND PART NUMBER WHEN ORDERING PARTS.

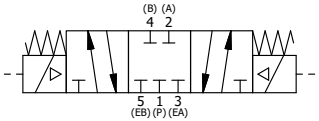


| NO. | DATE | REVISION |
|---|---|---|
| A | 6/1/2018 | ECG3 GASKET TO EMG3, CHNGD END CAP GEOM. |

LIMITS ON DIMENSIONS UNLESS OTHERWISE SPECIFIED
2-PL DECIMAL ± .01
3-PL DECIMAL ± .005
FRACTIONAL ± 1/64
ANGULAR ± 1/2'

**AAA PRODUCTS INTERNATIONAL**
7114 Harry Hines Blvd
Dallas, TX 75235

| | | | |
|---|---|---|---|
| DRAWN: RMcKenna | DATE: 5/27/2019 | CHECKED: KWaite | DATE: 5/27/2019 |
| SCALE: 1 : 1 | SHEET: 1 OF 1 | RELEASED: HWomack | DATE: 5/27/2019 |

TITLE: 1/4" SIDE PORT, DBL SOL, 3 POS, CLSD SPR CTR, ATEX, 24VDC, DUST EXCLDR, EXT PILOT

PART NO.: ESY2TLZ 24VDC

REV.: A

THE INFORMATION CONTAINED WITHIN THIS DOCUMENT IS PROPRIETARY TO AAA PRODUCTS AND MAY NOT BE DISCLOSED WITHOUT PRIOR WRITTEN CONSENT

D:\Engineering\Product\Valve\Assembly\Standard\SCV\DWG\ESY2TLZ 24VDC.dw